EXPERIMENT -1

AIM : To study the working and construction details of a fire tube boiler.

APPARATUS : Model of different types of boilers.

THEORY: *FIRE TYPE BOILER*

In the fire tube boiler, the fuel gases pass through the tube and water surround them.

Types

1. Cochran boiler
2. Lancashire boiler
3. Locomotive boiler

COCHRAN BOILER-

Cochran Boiler is a vertical drum axis, natural circulation, natural draft, low pressure, multi-tubular, solid fuel fired, fire tube boiler with internally fired furnace. It is the modified form of a simple vertical boiler. In this boiler, the fire tubes are placed horizontally. The efficiency of this boiler is much better than the simple vertical boiler. The essential consist of —

1. Boiler shell with hemispherical crown.
2. Furnace, firebox and grate.
3. Combustion chamber and flue pipes.
4. Smoke box and chimney
5. Connections for boilers mountings and accessories.

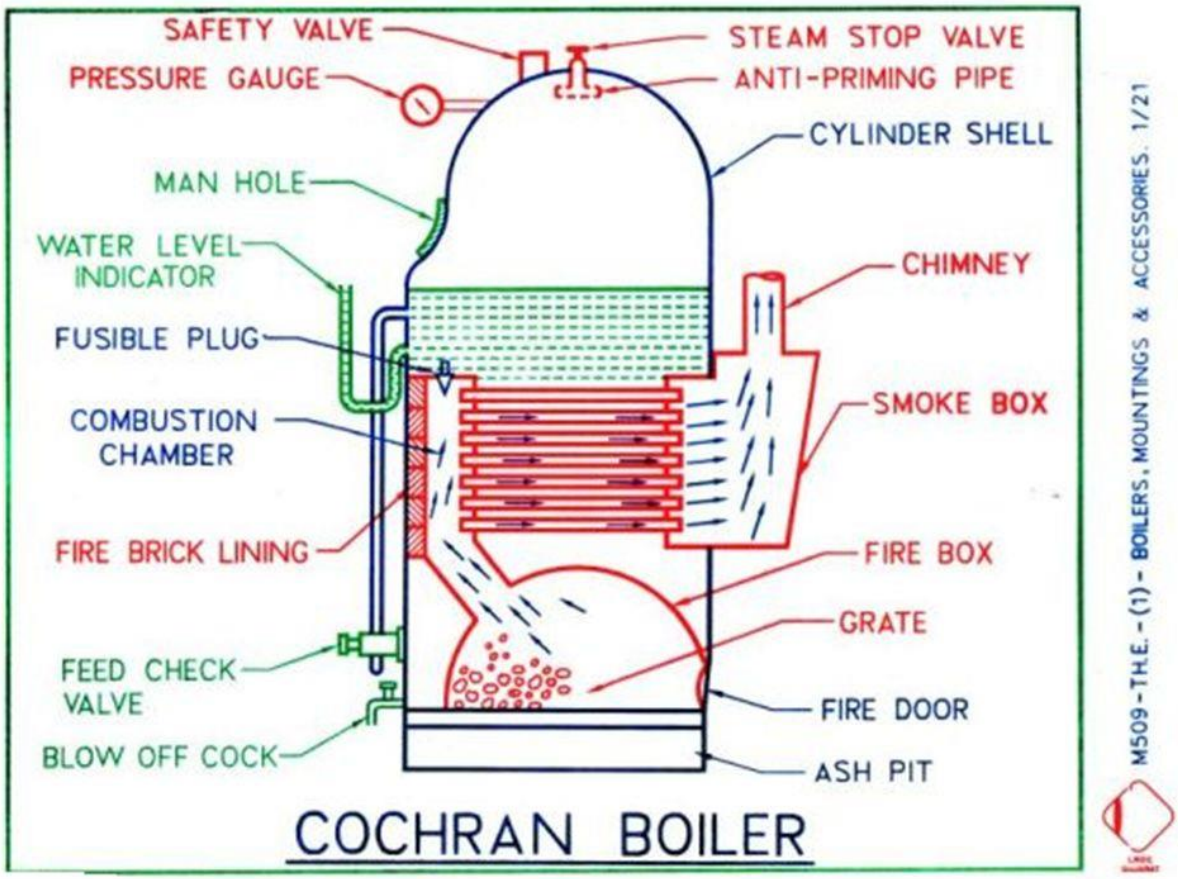

CONSTRUCTION-

1. Shell: It has a vertical axis cylindrical drum with hemispherical dome type shell at the top.

2. Grate: It is the platform on which the solid fuel is burnt.

3. Combustion Chamber: The burning of fuel takes place in the combustion chamber.

4. Fire Tubes: Cochran boiler has multi tubular fire tubes. The hot flue gases from the combustion chamber travels to the smoke box through these fire tubes. The fire tubes help in the exchange of heat from the hot flue gases to the water.

5. Fire Hole: It is the hole provided to fire the fuel inside the furnace.

6. Furnace: It lies at the bottom of the boiler. Furnace is the place where all is burnt. Without a furnace the working of this boiler is not possible.

7. Chimney: The chimney is attached to the smoke box. It transfers smoke to the environment. The size of the chimney is small as compared with other boilers.

8. Fire Brick Lining: The fire brick lining is present in the combustion chamber and helps in the combustion of the fuel.

9. Manhole: A manhole is provided for the cleaning and inspecting of the boiler from inside.

10. Flue Pipe: It is a small Passage connecting the fire box and combustion chamber. The hot gases enter the combustion chamber through the flue pipe.

Boiler mountings and accessories attached to this boiler are:

1. Pressure Gauge: It measures the pressure of steam inside the boiler.

2. Safety Valve: It blows off the extra steam when the steam pressure inside the boiler reaches

above safety level.

3. Water level Indicator: The position of the water level in the Cochran boiler is indicated by

the water level indicator.

4. Stop Valve: Stop valve is used to transfer steam to the desired location when it is required. Otherwise, it stops the steam in the boiler.

5. Blow off Cock: It is used to blow off the settle down impurities, mud and sediments present in the boiler water.

A Locomotive Boiler has several components. First of all, its shell or barrel. Generally, boiler shell diameter is about 8.5m and length is about 4m. A Steam Dome presents at the top section of the boiler. It contains the regulator for regulating the steam produced through the steam pipe when the boiler is operational.

Firing point or hole present at the rear end of the boiler. We already know that this boiler uses solid fuel in the furnace. Solid fuel is inserted and ignited into the furnace by using this hole. After that a fire box is present inside the boiler shell where the fuel is burned and generates heat. There is a platform called Grate where solid fuel like coal is kept and burnt.

It is a fire tube boiler and we already know how many fire tubes are present inside this boiler with its types. The fire tubes in which the hot flue gases pass. When hot flue gases pass it exchanges the heat with surrounding water. There is a smoke box and it is the only way where smoke is passing through the air. When solid fuel burns inside the furnace it also creates some smoke. These smokes need to be exhausted in the environment by the chimney.

There is a fire brick arch placed inclined over the grate. It is responsible for preventing the entry of the ash, burnt fuel and dust particles into the fire tubes during operation. Brick arch also provides a way for the hot flue gases to travel a definite path before entering in the boiler fire tubes. There is a pipe called Steam Pipe. By this pipe generated steam passes through. There are two steam pipes in the Locomotive Boiler. First one is the main steam passing pipe. It is located between the super heater and dome. Second steam pipe is connecting the super heater exit end to the steam engine.

A blast pipe is provided above the steam engine. By this pipe the exhaust steam passes. It has an important role during boiler operation. Generally a blast pipe is used to create the artificial draft that pushes the smoke out through the chimney. It also creates suction pressure for the hot flue gases. This suction pressure allows the hot flue gases to pass forward and it passes through the boiler fire tubes.

This boiler has a Super-Heater and it superheats the steam to the desired temperature. Steam used to be super heated before it entered into the cylinder of the steam engine, Because wet steam creates is harmful for the engine. There are super heater element pipes by which the steam travels and becomes superheated.

WORKING

1. In the Cochran boiler first the fuel is inserted into the fire box and placed on the grate. The fuel is ignited through the fire hole provided at the right bottom of the boiler.

2. The fuel is burnt in the fire box and due to the burning of the fuel, smoke and hot flue gases emerge. The hot flue gases enter into the combustion chamber through flue pipes.

3. From the combustion chamber hot gases enter into the fire tubes. The fire tubes are surrounded by water. The hot flue gases inside the tubes exchange the heat from the hot gases to the water. Due to the exchange of heat, the temperature of the water starts increasing and it gets converted into steam. The steam produced rises upward and collects at the top of the boiler in the hemispherical dome. An anti-priming pipe is installed at the top of the boiler which separates the water from the steam and makes it dry steam. This dry steam is then transferred to the turbines through the steam stop valve.

4. The hot flue gases and smoke after exchanging heat moves to the smoke box. From the smoke box the burnt gases and smoke is discharged to the atmosphere through the chimney.

5. Burnt fuel is transferred to the ash pit. Blow off cock is present at the left bottom of the boiler and is used to blow off the impurities, mud and sediment from the boiler water.

6. A fusible plug is also provided at top of the combustion chamber. When the temperature of the combustion chamber crosses the permissible level, the fusible plug melts and the water through the combustion chamber enters into the furnace of the boiler and stops the fire. In this way a big fire accident can be prevented to take place and also protects the boiler from damage.

7. Various boiler mounting and accessories are attached to the boiler for its efficient working.

LOCOMOTIVE BOILER

A locomotive boiler is a horizontal drum axis, multi-tubular, natural circulation, artificial draft, forced circulation, mobile, medium pressure, solid fuel fired fire tube boiler with internally fired furnace. It is used in railway locomotive engines and in marine. It is a mobile boiler and has a high steam generation rate.

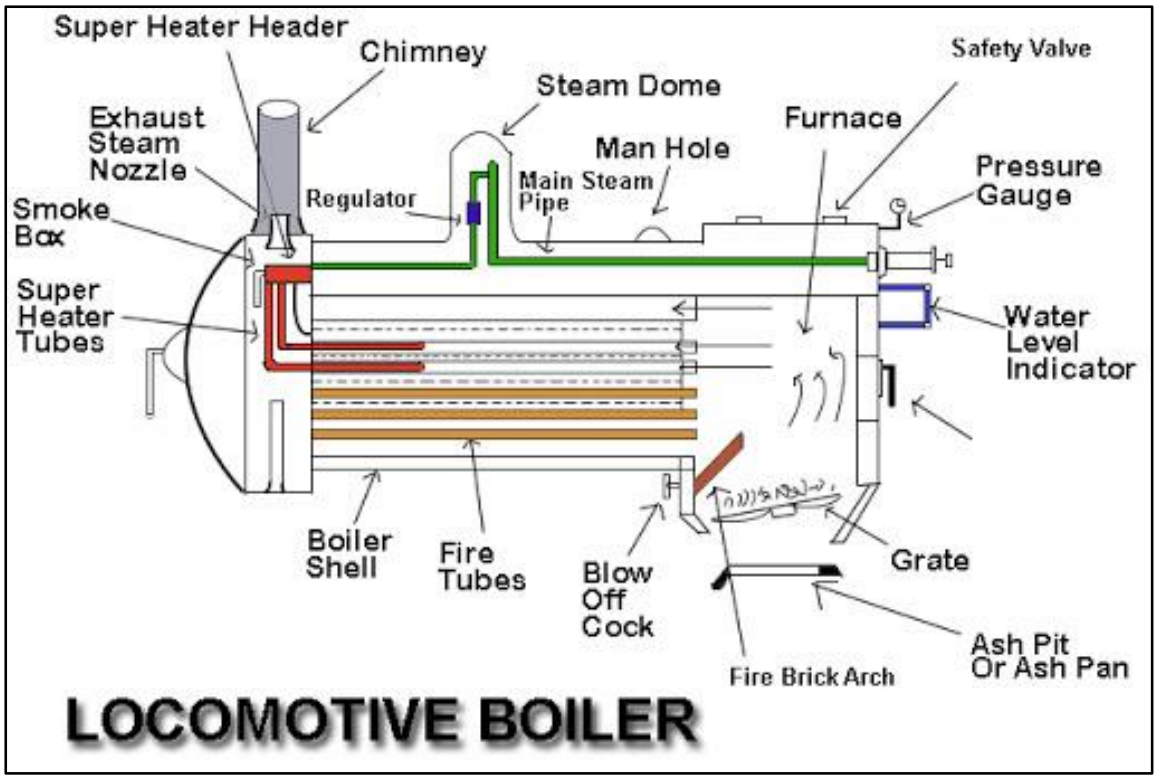

CONSTRUCTION

1. Fire hole: It is a hole provided at the rear end of the boiler. The solid fuel is inserted and ignited into the furnace through this hole.

2. Fire box: It is a box in which the burning of the fuel takes place.

3. Grate: Grate is a platform on which the solid fuel is kept and burnt.

4. Fire brick arch: It is a brick arch placed inclined over the grate. It prevents the entry of the ash, dust and burnt fuel particles into the fire tubes. It provides a way for the hot flue gases to travel a definite path before entering into the fire tubes of the boiler.

5. Boiler tubes: They are the fire tubes through which the hot flue gases pass and exchange the heat with surrounding water.

6. Smoke box: According to its name, it is a box in which the smoke of the burnt fuel after passing through the fire tubes gets collected. From there it is exhausted in the environment by the chimney.

7. Blast pipe: It is pipe provided above the steam engine. The exhaust steam passes through this blast pipe. It is used to create the artificial draft that pushes the smoke out through the chimney and creates suction for the hot flue gases. The suction created allows the hot flue gases to move forward through the fire tubes.

8. Steam pipe: It is a pipe through which the steam passes. We have two steam pipes; one is the main steam pipe present in between the superheater header and dome. And second one is that which connects the superheater exit end to the steam engine.

9. Superheater: It superheats the steam to the desired temperature before entering into the cylinder of the steam engine.

10. Super heater element Pipes: These are the pipes of the superheater through which the steam travels and gets superheated.

11. Dome: It is Present at the top and contains the regulator for regulating the steam produced through the steam pipe.

12. Regulator valve: It is a valve that regulates the steam through the main steam pipe for Superheating.

13. Safety valve: It is used to maintain the safe working steam pressure in a locomotive boiler. It blows off steam when the pressure of the steam increases above safety level and prevents blasting of the boiler.

14. Superheater header: It is the head of the superheater which accepts the steam from the steam pipe.

15. Chimney: It is used to throw out the exhaust smoke and gases to the environment. The length of the chimney is very small in this boiler.

WORKING

1. In a locomotive boiler, first the solid fuel (coal) is inserted on the grate and is ignited from the fire hole. The burning of the fuel starts and it creates hot flue gases. A fire brick arch is provided that makes the flow of hot flue gases to a definite path before entering into the long tubes (fire tubes). It also prevents the entry of burnt solid fuel particles into the fire tubes.

2. The hot flue gases pass through the long fire tubes and heats the water surrounding them. Due to the heating the water gets converted into saturated steam and gets collected at the top.

3. The saturated steam from the dome enters into the main steam pipe through the regulator valve. The steam travels in the main steam pipe and reaches to the superheater header. Form header, the steam enters into super heater element pipes. Here it is superheated and then the superheated steam enters into the steam pipe of the smokebox.

4. The steam from the superheater goes to the cylinder containing the piston. The superheated steam made the piston move within the cylinder. The piston is connected to the wheels of the steam engine and the wheels start rotating.

5. The exhaust steam from the cylinder enters into the blast pipe. The burnt gases and smoke after passing through the fire tubes enters into the smoke box. The exhaust steam coming out from the blast pipe pushes the smoke out of the boiler through the chimney. Here the smoke cannot escape out of the boiler on its own, so an artificial draft is created by exhaust steam coming out from the steam engine. This artificial draft pushes the smoke out of the smoke box and creates suction for the hot flue gases.

LANCASHIRE BOILER

Lancashire boiler is a horizontal drum axis, natural circulation, natural draft, two-tubular, low pressure, stationary, fire tube boiler with furnace located internally. Its main purpose is to create steam and then this steam is used to drive steam turbines for the power generation. It has high thermal efficiency and it is about 80 to 90 percent. It is mostly used in locomotive engines and marines etc.

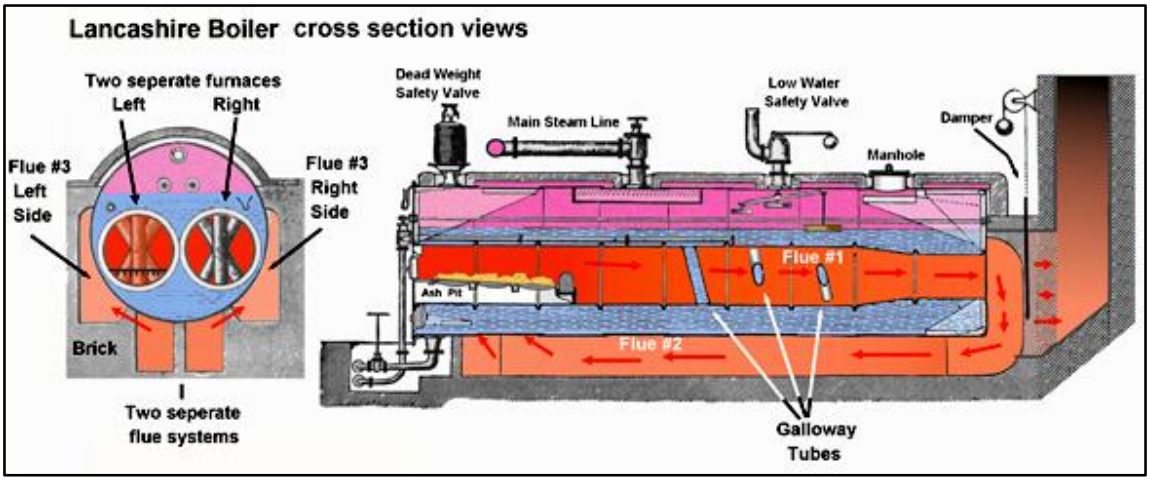

1. Safety valve: it is used to blow off the steam when the pressure of the steam inside the boiler exceeds the working pressure.

2. Water level indicator: it indicates the level of water in the boiler. It is placed in front of the boiler. Two water level indicators are used in the boiler.

3. Pressure gauge: The function of the pressure gauge is to indicate the pressure of the steam inside the boiler.

4. Steam stop valve: Its function is to stop and allow the flow of steam from the boiler to the steam pipe.

5. Feed check valve: It stops and allows the flow of water inside the boiler.

6. Blow off cock: Its function is to remove the sediments or mud periodically that is collected at the bottom of the boiler.

7. Manhole: it is a hole provided on the boiler so that a man can easily enter inside the boiler for the cleaning and repairing purpose.

8. Fusible plug: it is used to extinguish the fire inside the boiler when the water level inside the boiler falls to an unsafe level and prevent explosion. It also prevents the damage that may happen due to the explosion.

9. Grate: it is a platform which is used to burn the solid fuel.

10. Fire door: it is used to ignite the fuel present inside or outside the boiler.

11. Ash pit: it is used to collect the ash of the fuel after the fuel is burnt.

Generally, this boiler consists of a large drum. Its diameter can be up to 4-6m and length can be up to 9-10m. Normally this drum consists of two fire tubes and its diameter is up to 40 percent of the diameter of the shell. For this boiler the water drum is placed over the bricks. Where three spaces are created between the drum and the brick wall. First one is at the bottom and second one is at the sides. When the boiler is operational, then the flue gases pass through the fire tubes and side and bottom space.

The great thing for this boiler is that, water level inside the drum is always above the side channels of flue gases. For this reason more heat can transfer to the water. But water drum is not completely filled with water. Boiler water drum is usually half filled with water from the bottom section of the drum and the upper half space is for generated steam. Generally, the Furnace of this boiler is located at one end of fire tubes which is inside the boiler.

Then low brick is present at the grates and it makes an obstacle to unburned fuel and ash to flow in fire tubes during operation. Lancashire Boiler also consists of other necessary mountings and accessories. Those are economizer, safety valve, super heater, water gauge, pressure gauge and some other parts. All are for the better performance of this boiler.

WORKING

1. Lancashire boiler consists of a horizontal cylindrical shell filled with water surrounding two large fire tubes.

2. The cylindrical shell is placed over a brick work which creates several channels for the flow of hot flue gases.

3. Solid fuel is provided by the fire door which is then burnt over a grate at the front end of each fire tube.

4. A small arc shape brick work is provided at the end of the great to deflect the flue gases upward and prevent the entry of burning coal and ashes into the interior part of the fire tubes.

5. The fire tubes are slightly conical at the rear end to increase the velocity of hot flue gases. When hot flue gases are allowed to pass through the downward channel at the front end of the fire tubes. Now these gases pass through the side channel towards the rear end of the fire tube and finally escape out through the chimney.

6. There are dampers at each side channel to regulate the air flow.

7. Feed check valve is used to feed the water uniformly to the boiler shell.

8. Once the boiler is at quickly, water converts into steam by absorbing the heat from the flue gases. This steam is stored at the upper portion of the boiler where an anti priming pipe separates the water from steam. Thus, the steam stop valve receives the dry steam for various purposes.

9. A man hole is provided at the top and bottom of the shell to allow a man to enter into the boiler and clean it.

10. A blow off valve is provided to remove the mud that has settled down. It is also used to clean the boiler.

EXPERIMENT – 2

AIM: To study the working and construction of water tube boilers.

APPARATUS : Models of different types of boilers.

THEORY: WATER TUBE BOILERS: The tubes contain water and combustion of fuel flow outside the tubes.

BABCOCK AND WILCOX BOILER:

It is a horizontal, externally fired, water tube, natural circulation type of stationary boiler

CONSTRUCTION

1. It consists of a welded steel high pressure drum mounted at the top. From each end of drum connections are made with the uptake header and a down take header. The headers are joined to each other by a large number of tubes which are kept inclined at an angle of 15 degrees to the horizontal. The water tubes are straight, solid drawn steel tubes about 10cm in diameter and are expanded into the bored holes of the headers. Due to serpentine (sinusoidal)form of headers, the tubes are staggered and this exposes the complete heating surface to flue gases.

2. The furnace is arranged below the uptake header. The unit has a grate for the fuel burning, provided with a chain grate stoker. The coal is fed to the

chain grate stoker through the fire door. The chain speed is so adjusted that by the time coal reaches the other end of the grate, its combustion has been complete. The residual ash falls into the ashpit.

3. Baffles are provided across the water tubes to act as reflectors to the flue gases and to provide them with gas passes.

4. At the bottom of the rear header is the mud box. The foreign matter held in suspension in water gets collected in it and can be blown off from time to time. The access to the interior of the boiler is provided by the doors. This is necessary to clean the tubes and remove the soot. The draught is regulated by a damper which is provided in the black chamber.

5. For getting the superheated steam the unit is fitted with superheated tubes which are arranged in the combustion chamber above the water tubes. Vents are also provided for mountings and accessories such as safety valves. Pressure gauge, water level indicator, fusible plug and feed check valve etc. The entire assembly of the water tube is hung along with the drum from the steel girder frame by steel rods called slings in a room made of masonry bricks lined with fire bricks.

WORKING

The boiler drum shell is filled with water through a feed valve and a constant water level is maintained up to about 2/3 part in the shell. The water from the drum flows through inclined tubes via down take header and then goes back into the shell in the form of water and steam via uptake header. Obviously the circulation of water is maintained by convective currents. The hottest water in steam rises from the tubes to the uptake header and then through the riser enters the boiler drum. The steam vapours escape through water to the upper half of the drum. The cold water flows to the drum to the rear header and that completes the water circuit. The hot combustion gases produced by burning fuel on the grate rise upwards upto the water drum and then downwards. They again move upwards downwards between the baffles .Baffle plates make the hot gases move in such a way that a longer contact time is maintained between the hot gases and inclined water tubes. During

their travel, the gases give their heat to water and steam is formed. Finally the hot gases escape to the chimney through the smoke chamber. The steam collected in the water drum is next led to the superheater tubes via an anti-priming pipe. Since the superheater tubes are exposed to hot gases, the steam passing through them gets superheated. Then steam is raised from the cold boiler, the superheater should be flooded filled with water) to avoid its burning. The superheated steam is finally taken out through the stop valve and supplied to the engine when needed. CAPACITY AND UTILITY: Evaporative capacity ranges from 20,000 to 40,000 kg/hr and operating pressures from 11.5 to 17.5 bar are common. The steam from such boilers is primarily used to run steam turbines and generate electric power.

MERITS

i) The unit has the capacity to quickly cope with high peak loads which are generally needed at thermal power stations.

ii) The inspection of the boiler can be carried out even when the boiler is in operation.

iii) Draught loss is minimum.

iv) The replacement of defective tubes can be made readily.

v) Further since the boiler unit (except furnace) is suspended any expansion or contraction of the boiler has no harmful effects on the masonry work enclosing the furnace and the boiled.

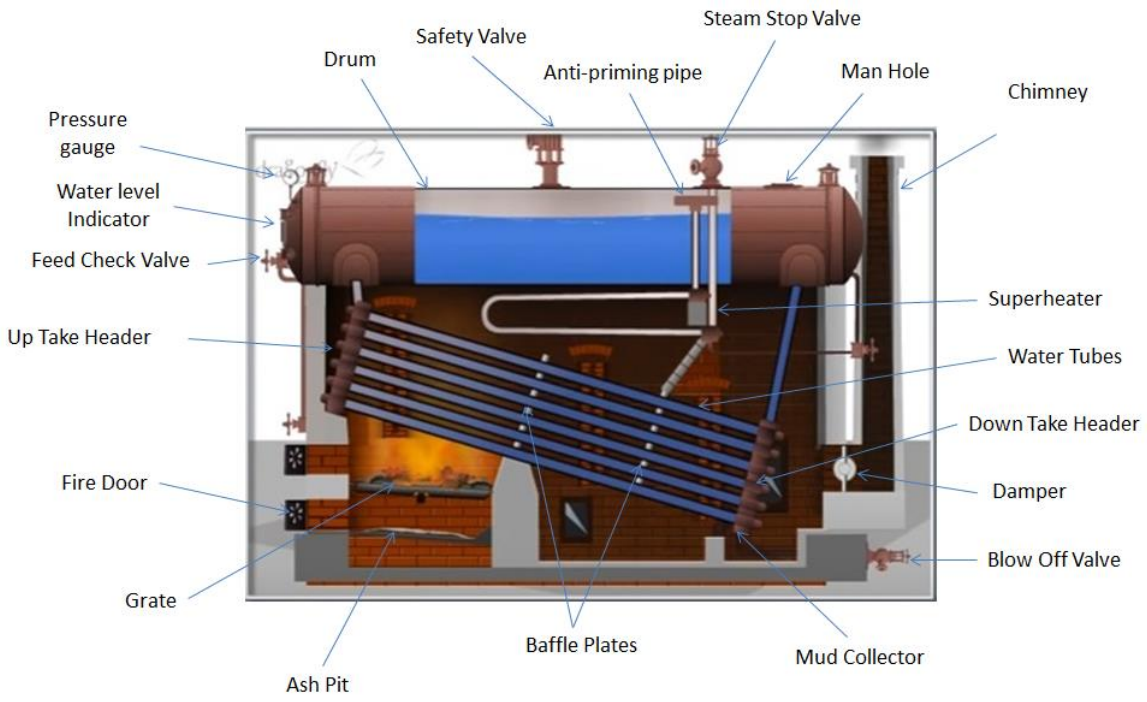

Fig 2.1. Babcock and Wilcox boiler

LOEFFLER BOILER

It is a high pressure boiler which is of water tube type and employs forced circulations.

i) The feedwater from the hotwell is made to pass through the economiser section with the help of a feed pump. While passing through the economiser, the feed water gains some heat from the exhaust gases. Thereafter the feedwater is fed into the boiler drum which is housed at any convenient point outside the furnace setting.

ii) There is a group of nozzles which receive a part of superheated steam generated in the boiler. The nozzles pass this steam to the evaporating drum where it mixes with feed water and generates steam. The rate of flow of feed water and superheated steam is so maintained that after the mixing, the water evaporates into steam which has a high dryness fraction.

iii) The steam from the evaporating drum is drawn by a steam circulating pump and it is passed to the superheater. The system has 2 superheaters : one is a horizontal convection superheater located in the path of exhaust flue gases and the other is a radiant superheater which is arranged above the furnace and receives intense heat by radiation.

iv) About 1/3rd of the superheater steam is supplied to the steam turbine for expansion work and the remaining 2/3rd passes back to the evaporator through a set of nozzles.The steam gives its superheat to the water contained in the drum resulting into additional generation of saturated steam.

v) A blower draws in cold air from the surroundings and makes it flow through the air pre heater which is arranged in the path of exhaust flue gases. The heated air aids in economic combustion.

It is to be noted that the Loeffler Boiler evaporates water solely through the means of superheated steam. The furnace heat is supplied only to the economiser and superheater. Apparently, steam is being used both as heat carrying and heat absorbing medium. Since the evaporating tubes carry only superheated steam, the poor quality feed water has no detrimental effect of scale formation. For this reason, these are best suited for marine transport power generation. Further, these boilers are compact in design and have been built up for steaming capacity of 1 lakh kg/hr and operating pressures up to 150 bar.

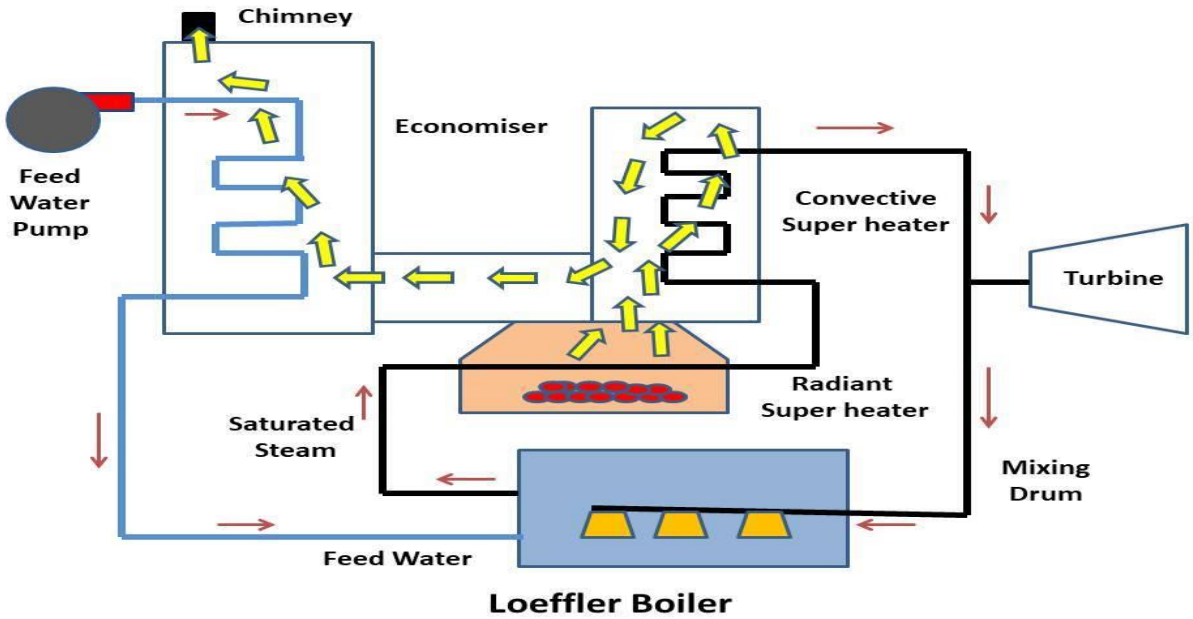

Fig 2.2. BENSON BOILER

It is a supercritical type water tube type boiler which employs forced circulation. Apparently in such a boiler the entire process of heating, steam formation and superheating is done in a single continuous tube. The water goes in at one end and superheated steam leaves at the other end, and due to this aspect, this type of boiler is known as mono-tube once-through forced circulation boiler.

The essential components of Benson boiler are:

1) Économiser section
2) Radiant heating section where most of the heat is transmitted and water gets heated almost to the critical temperature.
3) Superheating section where superheating is done to the prescribed temperature level.

The feed water is supplied by the feed pump at 225 bar pressure (higher than critical pressure) to the economiser and next to the radiant evaporator. This evaporator receives immense heat from the furnace and converts most

of the water to steam. The evaporation of the remaining water occurs in the convective evaporator tubes by absorbing the heat from the exhaust flue gases. The high pressure and almost dry saturated steam finally passes through the convective type of superheater where superheating is done to the prescribed temperature level.

Benson Boilers have been built and commissioned to generate steam up to 500 bar pressure, 650 degree Celsius temperature with generation rates as 1.56 lakh kg/hr. A Benson boiler presents the following advantages:

1) At critical pressure, steam and water coexist at the same density and no bubble formation occurs. As such, this critical pressure boiler is free from pulsations in water circulation, and no impairment in heat transmission from flue gases to water.
2) Since the generation of steam is carried out in the evaporating tubes, the cost of drums is eliminated.
3) Circulating pumps and down comers are dispensed.
4) The boiler is a self-contained unit, its parts can be easily carried and readily assembled.
5) The unit comparatively light in weight with high rate of steam generation
6) The unit is compact and occupies less space.
7) The boiler can be put into service in 10-15 minutes depending upon its size and pressure required.

Its disadvantages are as follows:

1) The evaporation process leaves small deposits of salts in the tube and that requires frequent washing and cleaning of tubes. To obviate the problem, the requirement is pure feed water. As such, the preparation of feed water becomes more important when compared to a conventional boiler.
2) The tubes are likely to get overheated when the water supply is insufficient.
3) The construction material for the boiler and the steam turbine must be able

to withstand very high pressure and temperature.
4) The conversion zone has to be located in the region where the flue gases have a low temperature. This is to avoid the deposition of solids and oxidation of surfaces.
5) Small storage capacity requires close coordination between steam output, feed water and fuel input to maintain temperature at constant level.

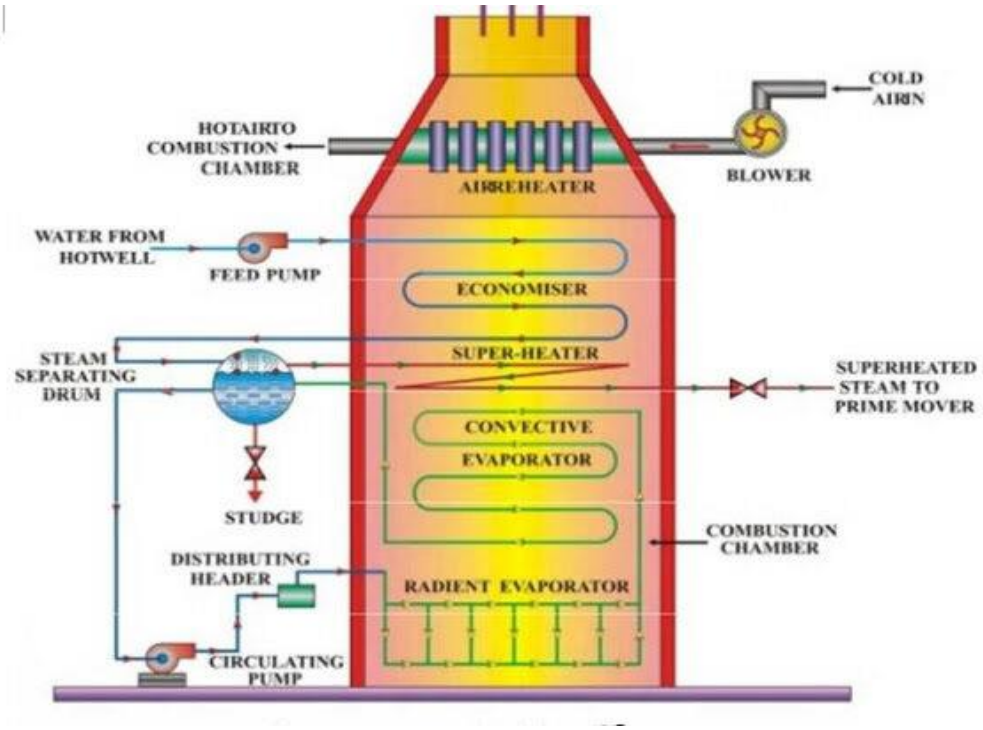

Fig.2.3. Benson Boiler

PURPOSES OF THE BOILER STEAM DRUM

In a modern boiler, the steam drum can serve several purposes:

1. It provides a place for the storage of steam, so that load increases can be accomplished quickly and smoothly.
2. It provides a place in which to install equipment that will separate water out of the steam, before the steam goes to superheaters, turbines, etc.
3. It provides a place in which equipment can be installed that will remove impurities from the steam, thus preventing these impurities from depositing

on other surfaces, such as turbine blades.
4. It provides a place from which heavy concentrations of impurities in the water can be removed, via the blowdown line.
5. It provides a place for the distribution of feedwater into the water circuits of the boiler.
6. It provides a place for the introduction of water treatment chemicals into the boiler.

The term "drum internals" is generally taken to mean all the devices installed within the boiler steam drum. This includes various types of steam separators, chemical feed lines, boiler feedwater lines, and continuous blowoff lines.

SEPARATION OF STEAM AND WATER

At low pressures, the lower density steam has a strong natural tendency to rise to, and disengage from, the water surface in the steam drum. The separation of the water and steam in low pressure systems can be accomplished without the aid of mechanical separators.

As the pressure rises, mechanical equipment becomes necessary. The dry pipe shown in Fig. 4 changes the direction of flow of the steam and water mixture, and causes most of the water to drop back into the drum, allowing the relatively dry steam to leave the drum. The dry pipe is an early form of separator that is still found on some low pressure boilers.

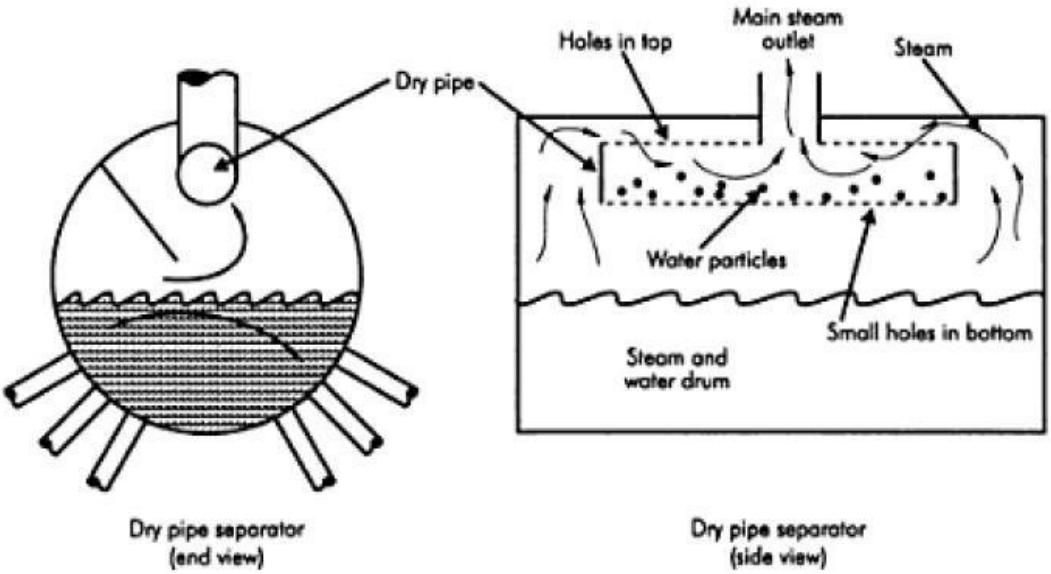

Fig .2.4. Steam separation in boiler drum without baffles

In a modern boiler drum, the separation of steam from the mixture delivered by the riser portions of the circuit usually takes place in three steps. The primary and secondary separation removes nearly all the water from the mixture, so that in effect, no steam is circulated back through the circuit, see Fig. 5. The third separation, or steam scrubbing, removes or reduces the amount of contaminants in the steam that leaves the drum.

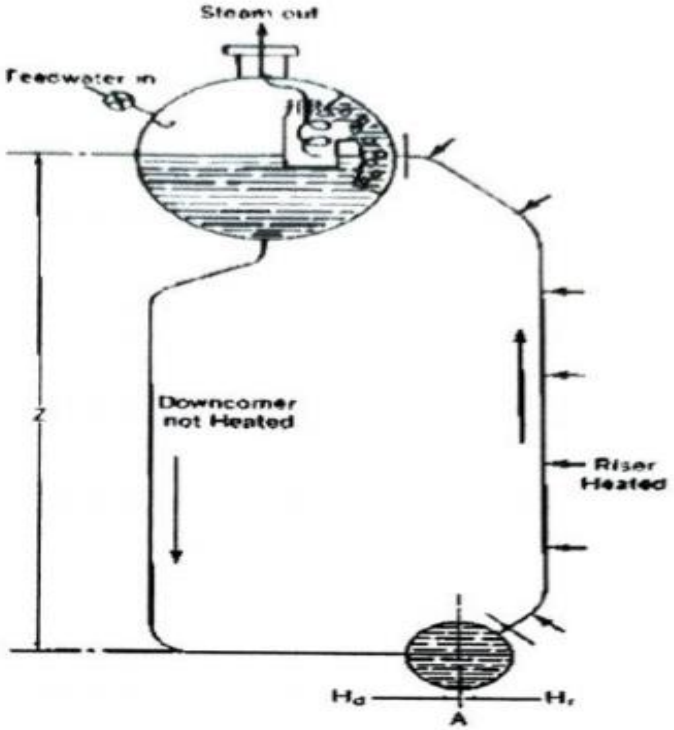

FIG .2.5. SIMPLE CIRCUIT PRIMARY STEAM SEPARATION

PRIMARY SEPARATORS

At higher pressures, the steam becomes more dense and its tendency to separate from water is not as strong. Thus, steam will be carried through the steam drum and back into the downcomers unless means are taken to prevent such action.

The cyclone steam separator was developed to remove the steam from the mixture of steam and water in the steam drum, and to provide the downcomers with steam-free water. These mechanical separators are installed in single or double rows in the steam drums as indicated in Fig. 6.

All of the steam and circulating water from the risers is collected behind a manifold baffle and then discharged into the cyclones. The water in the mixture will have a mass of between two (2) and twenty-five (25) times the

mass of steam in the mixture. The circulation ratio depends on the boiler design and the firing rate of the boiler.

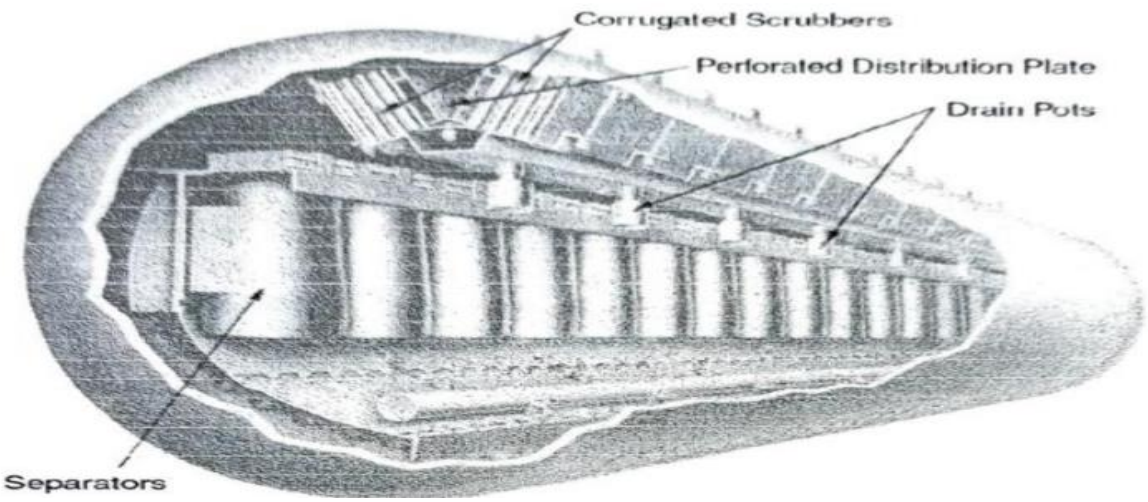

FIG .2.6. CYCLONE SEPARATOR AND STEAM SCRUBBER

The steam and water mixture swirls into the cyclones at high velocity, producing what is called a centrifugal force that is many times greater than the gravity separating force. This centrifugal action forces the water toward the periphery of the cyclones. The less dense steam flows up the central portion of the cyclones, and passes through a small corrugated scrubber at the top of the cyclone cylinder. This is illustrated in Fig. 7.

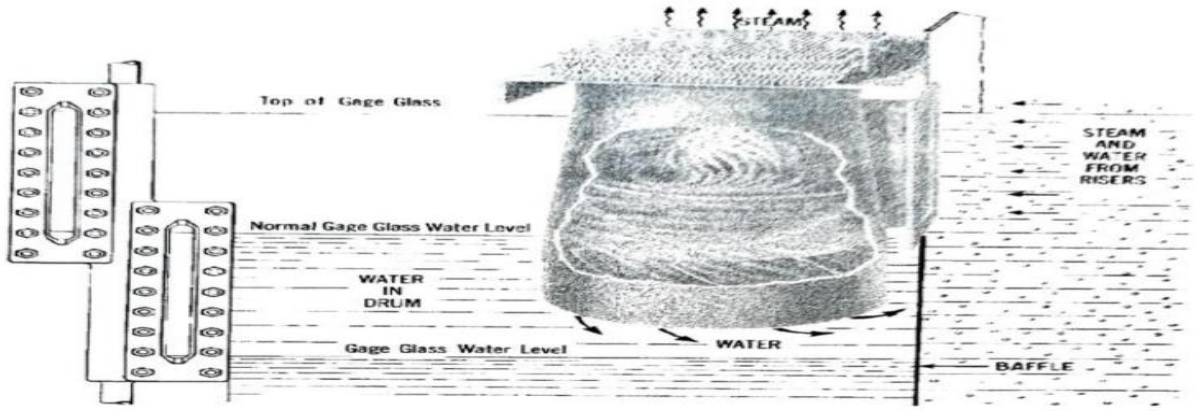

FIG .2.7. CYCLONE STEAM SEPARATOR

The steam leaves the top of the cyclone at a velocity low enough to prevent entrainment of water by the steam. This ensures that the steam quality is not affected by large variations in the water to steam ratio. Directional vanes at the bottom of the cyclone guide the water into the separator drum, utilizing the velocity energy in the water to overcome the head of water outside the cyclone. This prevents flooding of the cyclones, even when the water level in the steam drum is close to the top of the cyclone. It also permits a reasonably wide variation in the drum water level, without affecting circulation or steam quality.

The cyclone steam separator has no moving parts, and simply transforms a small portion of the circulating force into the centrifugal force required to separate the steam and water.

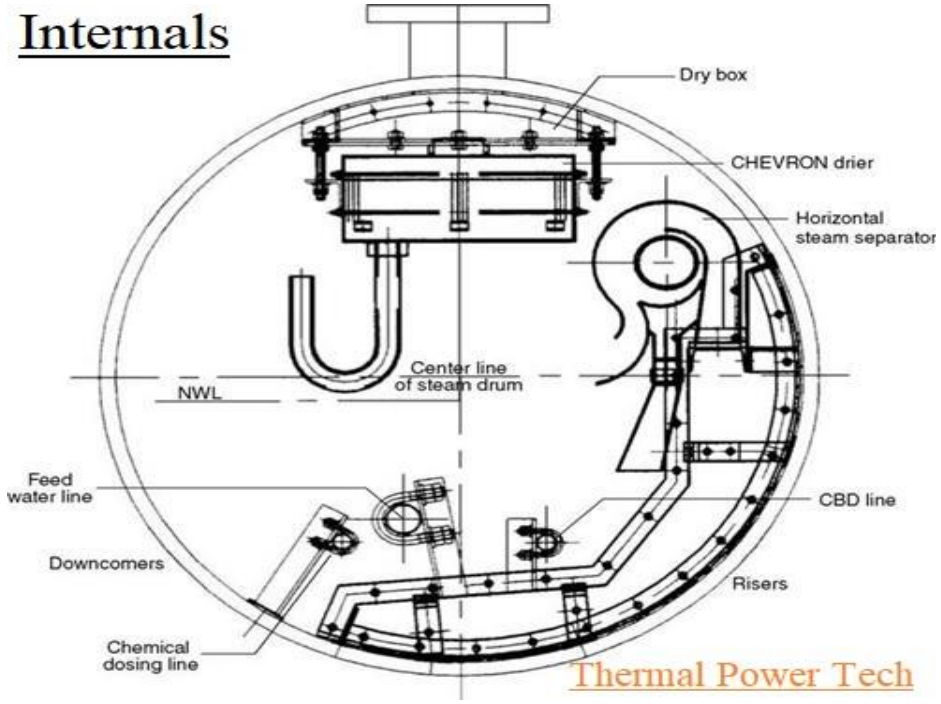

FIG .2.8. Drum Internals

DRYERS

The dryers or steam scrubbers are located at the top of the drum and are the last stage of moisture and contaminant removal before the steam leaves the boiler drum. The dryer or scrubber is generally a wire mesh or screen that will pick up any droplets of water and allow them to drop back to the water in the drum. Figs. 8 and 9 show the screen or mesh dryer. Figs. 4 and 9 show corrugated metal plate dryers with the drain pots or pipes to return the removed water to the water below. A more complicated type scrubber is shown in Fig. 8 where perforated trays, stainless wire mesh, and wash water are used for the removal of silica from the steam.

INTERNAL FEED PIPE

An internal feedwater pipe is used on most boilers. Fig. 9 shows an internal feedwater pipe entering the boiler through the drum head, and Fig. 1 shows a feedwater pipe that extends nearly the entire length of the steam drum. The internal feedwater pipe is arranged so that it reduces the risk of thermal shock and excessive turbulence by controlling the point at which the feedwater mixes with the water in the drum. On smaller boilers, this may be accomplished by a short feed pipe which discharges against a baffle. Larger boilers use a feedwater pipe which runs nearly the full length of the steam drum and is perforated over its entire length.

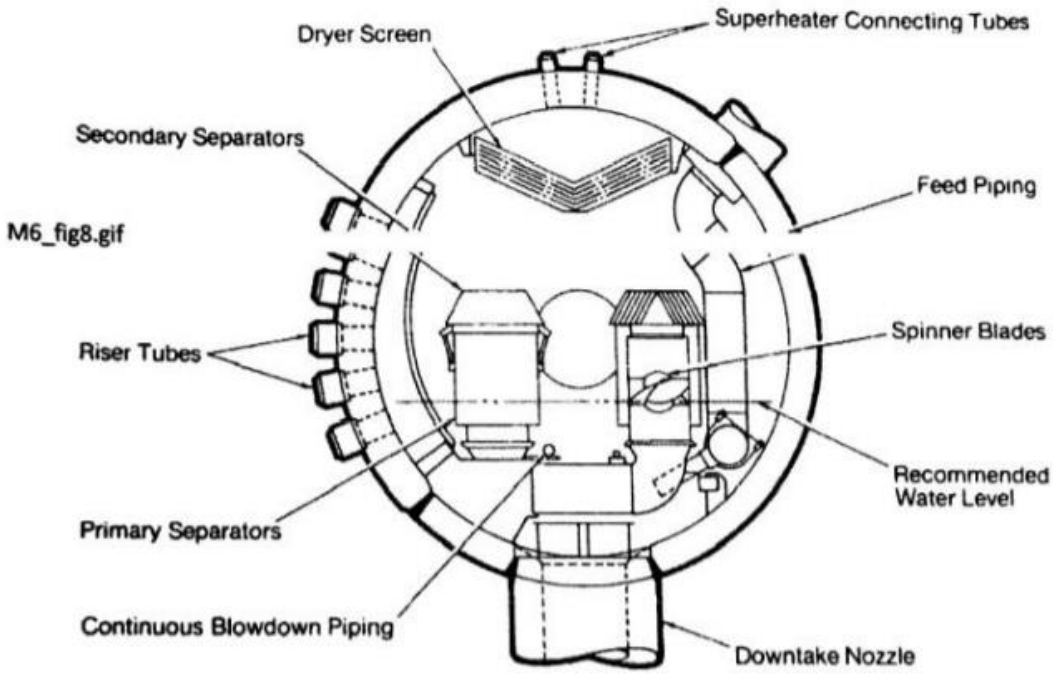

Fig .2.9. Internal feed pipe

CONTINUOUS BLOWDOWN PIPE

The continuous blowdown, or blowoff, is located several centimetres below the normal water level in the steam drum. This is where the water having the greatest concentration of dissolved solids is found. Fig. 10 shows the location of the continuous blowdown pipe. As the name implies, it continuously removes a controlled amount of concentrated water from the drum. The amount of blowdown is controlled by a special regulating or metering valve, equipped with an indicator that shows how much the valve is opened. The amount the valve is opened depends on the results of periodic boiler water tests.

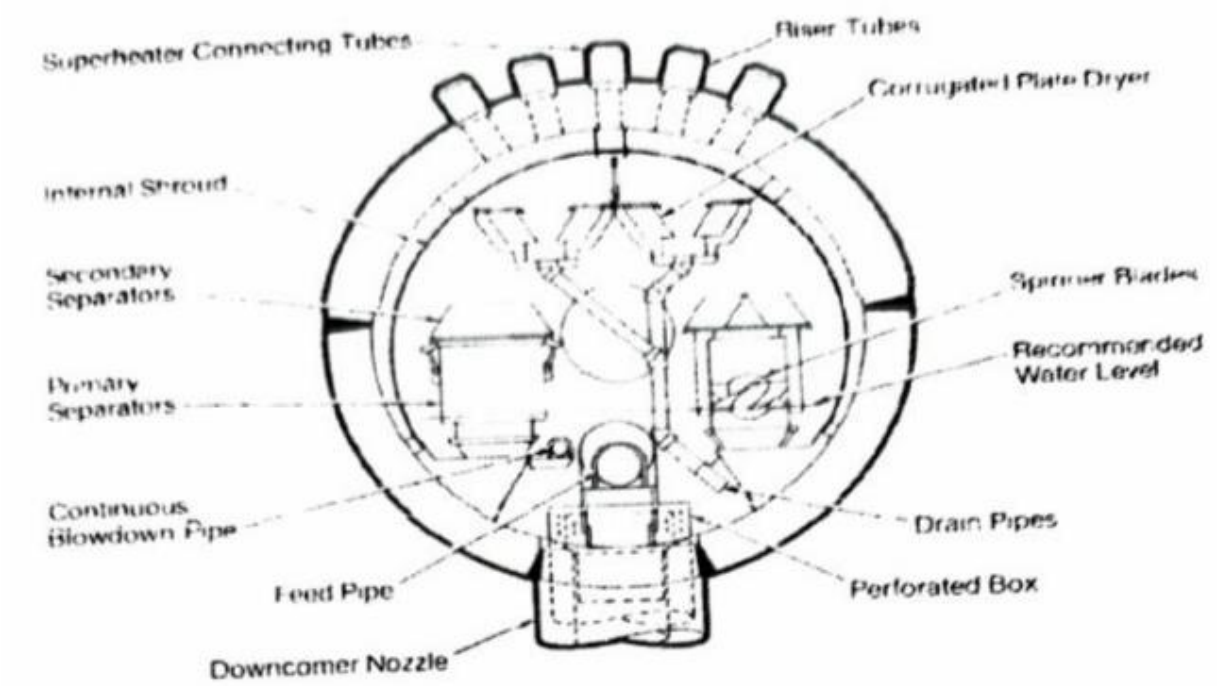

Fig .2.10. Continuous Blowdown Pipe

CHEMICAL FEED PIPE

Chemicals which are used for the control of scale, corrosion, and sludge within the boiler are fed into the drum by means of an internal pipe as shown in Fig. 11. The perforated chemical feed pipe extends into the drum and is positioned to ensure rapid mixing of the chemicals with the entering feedwater.

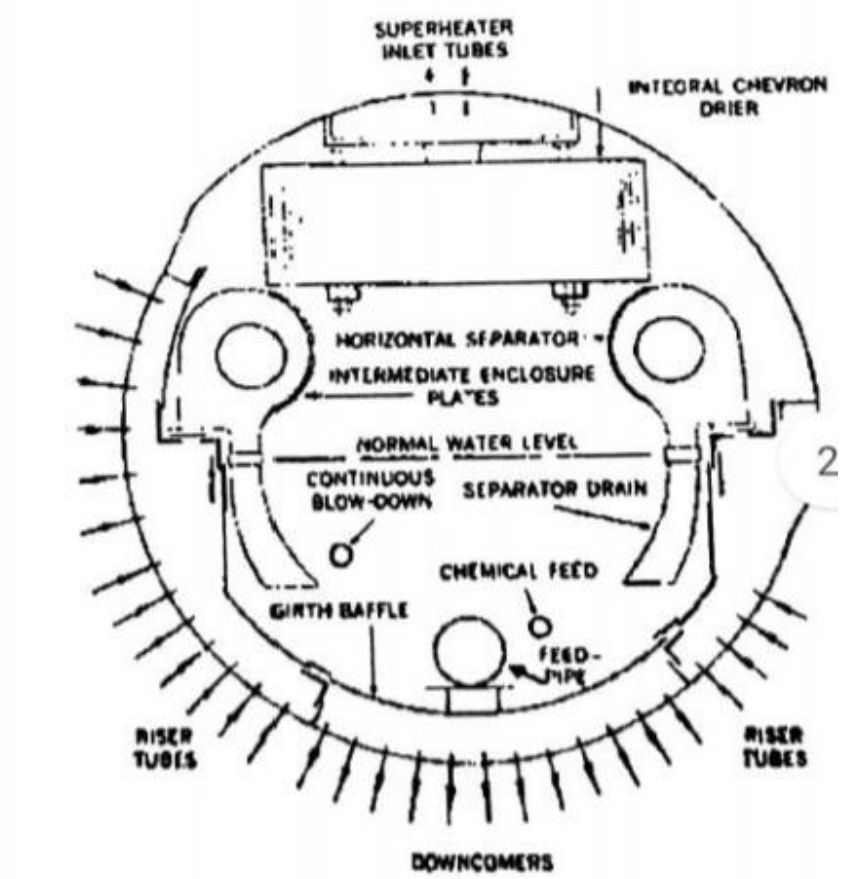

Fig .2.11. Drum internals , including Internal chemical feed pipe

EXPERIMENT - 3

Aim: Boiler drum and drum internals.

Boiler Drum

1. The drum is a pressure vessel that provides the necessary space for the separation of water.
2. It also provides water storage for preventing the starvation of tubes.

Specification

- Length: 15700mm
- Weight: 123tonnes
- Internal diameter: 1676mm
- External diameter: 1942mm
- Thickness: 133mm
- Material: Carbon Steel
- Turbo separators: 50

Description

1. Drum is made up of two halves of carbon Steel plates having thickness 133 mm.
2. The top half and bottom half plates are heated in a plate heating furnace at a very high temperature.
3. The semi-cylinder with hemispherical dished end are fusion welded to form the boiler drum.
4. The drum is of fusion welded design with hemispherical dished ends.
5. It has down corner stubs, riser tube stubs, super-heated outlet tube stubs.
6. It is located at the height of 53 m from the ground level.
7. Modern High capacity Boilers consists of 18 main columns and 12 auxiliary columns.
8. The drum is provided with manholes, which is used for the maintenance of the drum.
9. It is suspended from the ceiling girders with U rods.

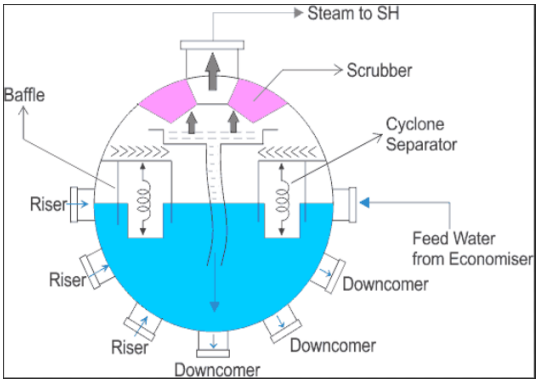

Fig.3.1,Gravity Separation

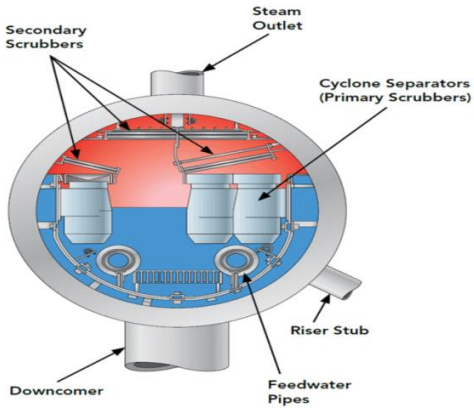

Fig.3.2,Filter Separation

Water and Steam circuit

1. The drum forms part of the boiler circulation system.
2. Feed water is supplied to the drum from the economiser through feed nozzles.
3. Downcomers- Water from the drum goes to waterfalls through 6 downcomers.
4. Bottom Ring Header- From the downcomer water goes to all four sides of the water walls through the bottom ring header.
5. Front Water Wall- These connections are made up of water tubes from the front portion of the bottom ring header to the front top header.
6. Water Platens- To increase the heating surface area without increasing the volume of the boiler furnace.
7. Left Side Water Wall- Connections from bottom ring header to left top header.
8. Rear Water Wall- About 60% of real water tube from a goose neck and are connected to the real top most header. Helps in maintaining a better distribution of flue gases stream in the transition zone.
9. Extended Water Wall- About 10% of tubes are connected to the extended water wall inlet header located below the goose neck.
10. Right Side Water Wall- The right side water wall connections from the right portion of the button ring header to the right top header.
11. Water Wall Assembly- The complete water valve assembly from the bottom ring header to the top header is shown.
12. Riser Tubes-
    - Riser tube connections from boiler top header to drum.
    - These are 6x23 rose riser tube connections on the drum.
    - Steam and water mixture is admitted to the drum through these riser tubes.
13. Drum Internal-
    - Separation of water from the steam takes place in the drum.
    - The saturated steam is led to the superheater through a superheater connecting tube provided at the top of the drum.

Drum Internals

Function:

1. Separation of water from steam water mixture.
2. Mixing and distributing the feed water.
3. Internal treatment of boiler water by adding chemicals.
4. Facilitating blowdown for reduction of boiler water concentration i.e, total dissolved solids.

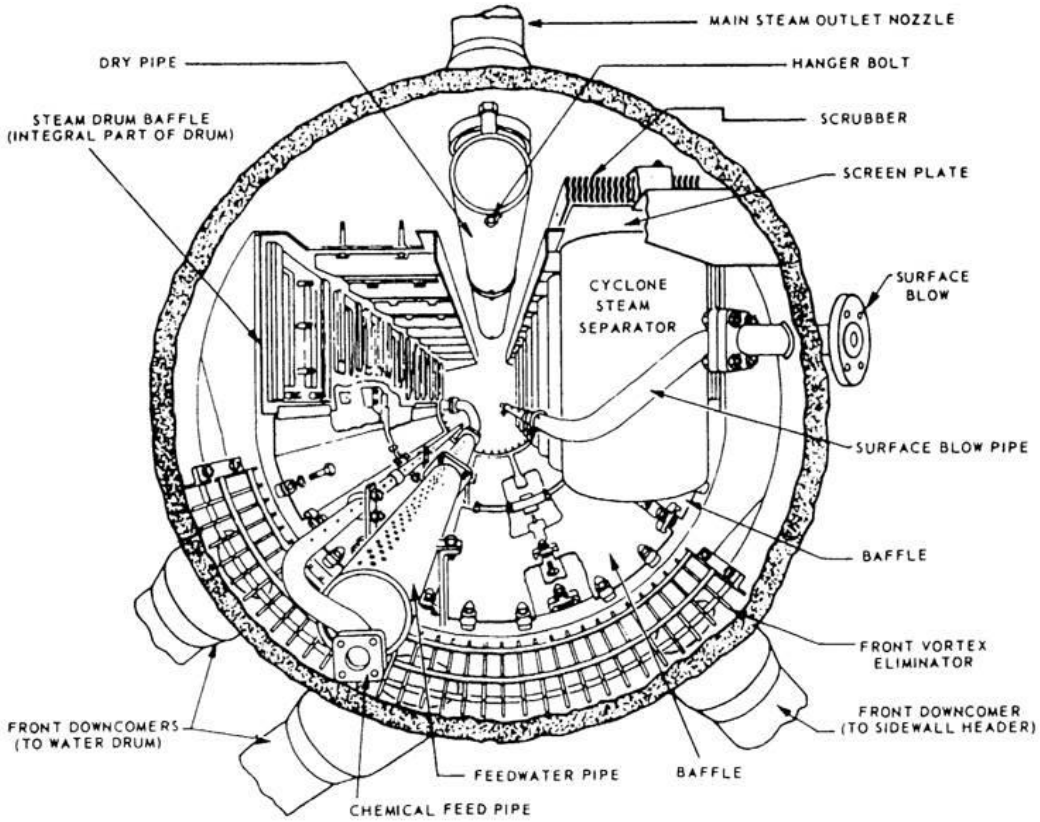

Fig.3.3, Internal of Boiler Drum

<u>Various Parts</u>

1. Feed Pipe:
   - It feeds water to the drum. Water leaving the economy is supplied to the drum through nozzles.
   - These nozzles are connected to an internal feed distributing header.
   - These are six level of riser tube connection welded to the drum

No. of riser tube- 6x23 rows
Diameter of riser tubes- 127mm

2. Separating Chamber:

- From the riser tubes team and water mixture flows into the drum through a narrow annulus.
- This is a welded construction formed by baffles.
- Baffle Plate- This surface directs the flow of substance either to prevent or to improve its flow. It directs steam and water mixture entering the drum to the turbo separator.

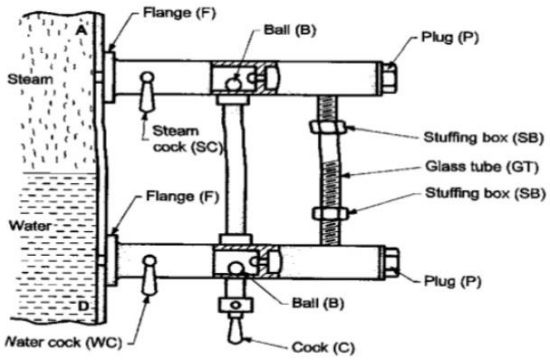

Fig.3.4,Arrangement for Water levels

3. Turbo Separator:

- From the lower end of the separating chamber the steam and water mixtures, if forced upward in the turbo separator.
- Separation takes place in three stages: in drums the separation first takes place in turbo separators, second stage takes place in corrugated sheets connected to the top of the turbo separator. The third stage takes place in the screen dryers.
- These are arranged in two rows extended along the length of the drum. To facilitate easy bolted connections are used

4. Screen Dryers:

- Third and final stage of steam separation takes place in it.
- It removes residual moisture from the steam leaving turbo separator.
- It consists of wire mesh of different gauges.

- 49 screen type dryers are arranged along the entire length of the drum. The steam coming out from the dryer is totally moisture free saturated steam.
- Principle- The steam passing between the stripes marking one or more shop changes of direction and throwing the heavier water particle coming in contact with the stripes.
- The velocity of the steam through the dryer must not be too high. It also facilitates the drainage of the separated water particles back into the drum water. The dryer boxes have more cutting surface.
- The die stream coming out from the drum is taken from super heating through a single row of steam tube located at the top of the drum. These outlet tubes are called superheater connecting tubes.

5. Antivortex Spider:

- The Vortex inhibitor is actually in the form of a cruciform.
- It is located at the inlet of the downcomer.
- It prevents the vertex formation at the inlet of the downcomer.

Safety Valves

1. To relieve the excess pressure over and above the permissible working pressure in the boiler drum.
2. It also provides the final protection in the event when interlocks and normal control fails to prevent over pressure built up.
3. Drum safety valve- Three number of spring type safety valves are fitted on the top of the drum. One at the right end and the two on the left end of the drum. Number of safety valves depend on units designed and steam flow capacity.

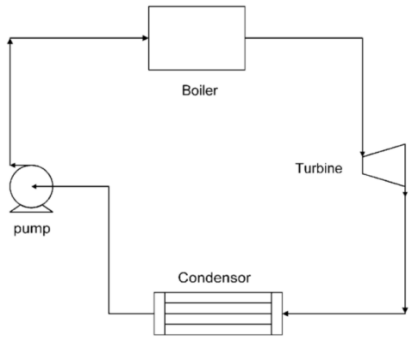

Fig3.5,Simple Rankine Cycle

Air Vents

1. Two numbers of air vents are provided on the drum to evacuate air from the drum during start up and drainage of the boiler.
2. One air went is mounted on the left side and another on the right side of the drum.

<u>Economiser</u>

It is useful for extracting the waste heat of chimney gases to preheat the water before it is fed into the boiler. This is done by the hot free gases existing in the last superheater or we heater at a temperature wearing from 370°C-540°C. The throwing away of such high temperature gases involved a great deal of energy losses. By this higher efficiency and better economy were achieved and hence the heat exchanger was called “economiser”.

EXPERIMENT-4

AIM :- Superheaters, Reheaters and. Desuperheaters

SUPERHEATER

Superheaters are one of the most important accessories of birler that improve the thermal efficiency. The superheater is a heat exchanger that overheats or superheats the saturated steam. By superheating saturated steam, the temperature of the steam is increased beyond the temperature of the saturated steam, and thus the efficiency of the energy production process can be raised. The benefits of using superheated steam are zero moisture content in the cast stages of the turbines, no condensation in steam pipes and thus increase the turbine internal efficiency.The superheater normally consists of the tubes conducting steam, which are heated by flue gases passing outside the tube. The tubes are usually connected in parallel using heaters, with steam entering from one header and exiting in another header. There can be several superheater units in the same boiler as well as reheaters, which is a superheater for heating external stem (steam already used in a a process outside the boiler)
Superheaters can be classified as:

1. Primary superheater:- 1st superheater where steam is heated upto some temperature.
2. Secondary superheater:- It is the second stage to further increase the temperature.

Superheater commonly classified as

i. Convection based
ii. Radiation based
iii.Combined superheater

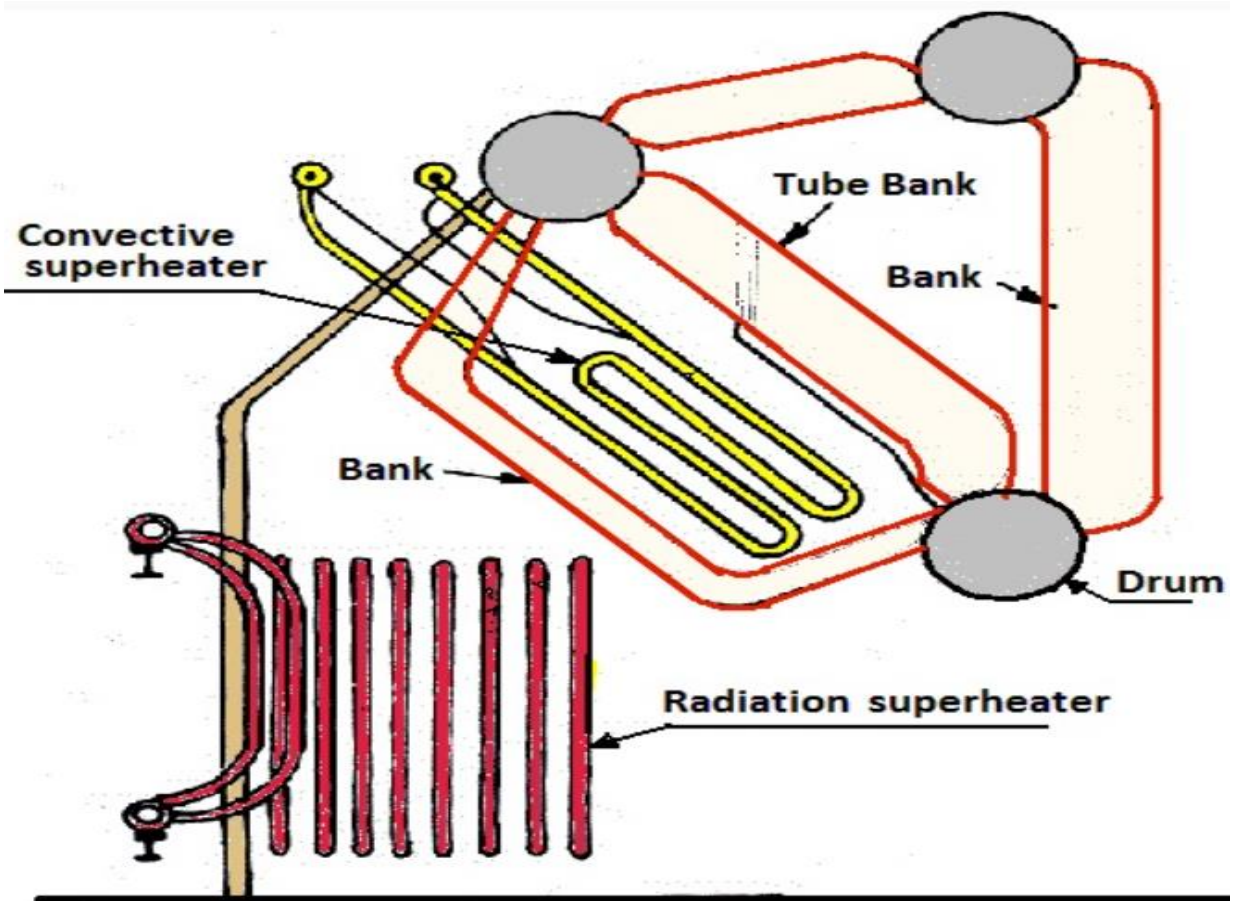

and heat is absorbed by the convection method. Convection based superheaters are used with relatively low steam temperature and the steam from the flue gases is mainly transferred by convection. They are placed after the furnace protected from the corrosive radiation of the flames. This type of superheater can also be protected from radiation by a couple of rows of evaporation tubes. Convection sup~rheaters are located in the convective zone of furnace, usually ahead of economizer.

Parameters that increase the convection

• Increasing the fuel and air flow (combustion gas flow)

• Increasing the mass flow rate of the steam

RADIATION SUPERHEATERS

From the convention SH steam goes to the radiant superheater which is placed in the radiant zone of the furnace. Radiation SH is installed at the top of the furnace, where the heat is absorbed by radiation. Radiation based superheaters are used to gain higher steam temperatures and the heat is mainly transferred by radiation.

COMBINED SUPERHEATERS:

Steam leaving the radiant superheater goes to the desuperheater where highly pure water is directly sprayed on the steam in such a quantity that the temperature of the steam after the last stage of superheating in the pendant superheater does not exceed the rated value. The pendant SH is a combined superheater in the sense that it receives heat partly by convention and partly by radiation. The radiation and combined superheaters together are often termed secondary superheaters.

CLASSIFICATION OF SUPERHEATERS ON THE BASIS OF MECHANICAL SUPPORT

i. Pendant superheater

ii. Inverted superheater

iii. Horizontal superheater

Pendant superheater: It is supported from above. It is firm structural support. But the limitation of pendant SH is that because it is hanging from the surface, so steam is condensed and collected in the bottom this slows down the steam rate.

Inverted superheater: It is supported from below. In this proper drainage of the condensed steam but the structural rigidity is lack.Horizontal superheater: They are usually supported in the vertical gas ducts. They have a good structural rigidity and proper drainage steam. But they do not view the flame directly so they are mainly from the convective type. This

convention superheaters are located in the flue gas channel, where the flue gas starts flowing downwards.

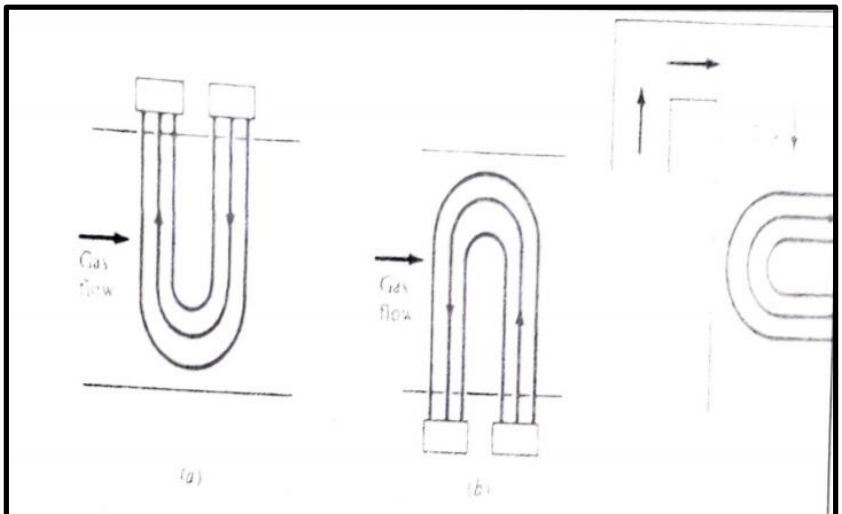

Figure 3-11 Schematic diagram showing (*a*) pendant, (*b*) inverted, and (*c*) horizontal reheaters.

REHEATERS

A reheater is basically a superheater that superheats stem existing in the high pressure stage of a turbine. The reheated steam is then sent to the low pressure stage of the turbine. By reheating steam between high pressure and low pressure turbines it is possible to increase the electrical efficiency of the power plant beyond 40%. Reheater design is very much similar to superheater design because both operate at high temperature conditions but their exit temperature is little bit less than superheater and steam pressures are 20-25% less than superheater. The reheater is usually located above the primary or convective superheater in the convective zone of utility boilers. It consists of a number of vertical coils of horizontal tubes connected between

two headers. Similar to the economizer and convective SH steam comes from the high pressure turbine and after being reheated it goes to the i.p. turbine for further expansion.

DESUPERHEATERS

The simplest type of desuperheater is an unlagged section of pipe where heat can be radiated to the environment. However apart from the obvious risk of injury to personnel from such a hot item of plant and the expensive energy wastage. This approach does not adjust to compensate for changes in the environmental conditions, steam temperature or steam flow rate. Control by attemperation means that the steam temperature is reduced by removing energy from the steam. In a tubular type a portion of steam taken out through tubes from a point between the primary and secondary superheaters by automatic value directed to a shell and tube heat exchanger where boiled water from the drum may be circulated. The steam gives some of its energy to that water and is mixed with the primary steam before entering the secondary superheater.

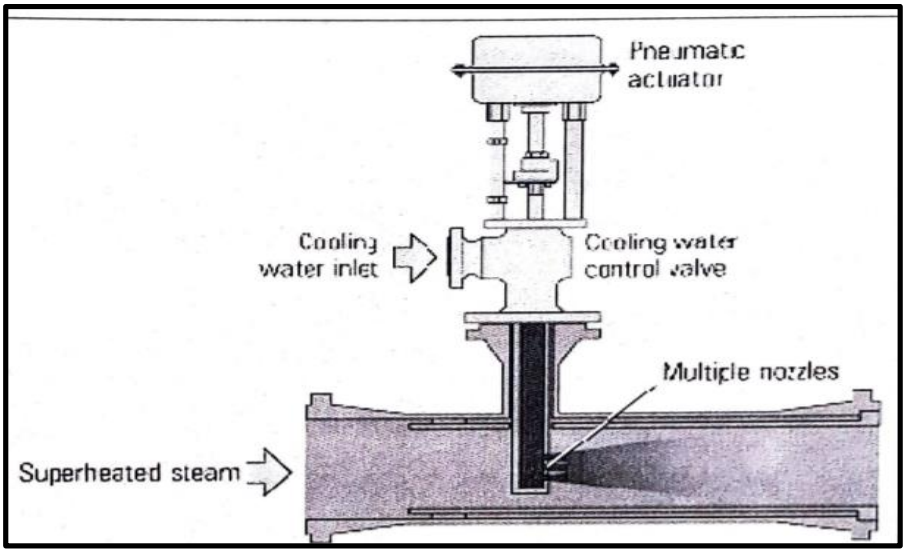

WATER SPRAY DESUPERHEATER .

In water spray desuperheater superheated steam is passed through a section of pipe fitted with one or more spray nozzles. These inject a file spray of water into the superheated steam which causes the water to be converted

into steam reducing the quantity of superheat. The working water may be introduced into the superheated steam in a number of ways; consequently there are a number of different types of water spray desuperheater.

WATER SPRAY DESUPERHEATERS ARE AFFECTED BY THE FOLLOWING FACTORS

PARTICLE SIZE: The smaller the water particle size the greater the ratio of surface area to
main and higher the rates of heat transfer. The water is broken into small particles using either
a mechanical device or steam atomizing nozzles.

TURBULENCE: As the flow within the pipeline becomes more turbulent the individual
entrained water particles residue longer in the desuperheater allowing for greater heat transfer.

THERMAL SLEEVE: Careful control of the spray is required to ensure that the water does
not fall out of suspension as this can result in thermal stresses being generated in the pipeline
and cracking may occur.

COOLING WATER FLOW RATE: The rate at which cooling water can be added to the
superheated steam.

WATER SPRAY TYPE DESUPERHEATERS

SINGLE SPRAY RADIAL INJECTION SPRAY DESUPERHEATERS: The simplest
The method of injecting cooling water is to introduce a nozzle through the pipe wall. The cooling

water particles are sprayed across the flow of the superheated steam.

ADVANTAGES:

1. Simple in operation
2. Cost effective
3, Minimum steam pressure drop

DISADVANTAGES:

1. Low turndown ratio
2. Longer absorption length than the steam atomizing type
3. Limited pipe size

APPLICATIONS: for constant cooling water requirements(steam lead, steam temp)

AXIAL INJECTION SPRAY SUPERHEATERS: this is a simple in line spray desuperheater but the point of injection is moved to the axis of the pipeline. The cooling water
is injected into the steam flow via one or more atomizing nozzles. Axial injection of the
cooling water improves the mixing of the water and the superheated steam by two methods:

1. As the water is injected along the centre of the pipeline it will be more evenly distributed throughout the superheated steam.

2. The cooling water delivering pipe ice. injected in the pipeline acts as an obstruction,
creating additional turbulence at the point of water injection due to vertex shredding.

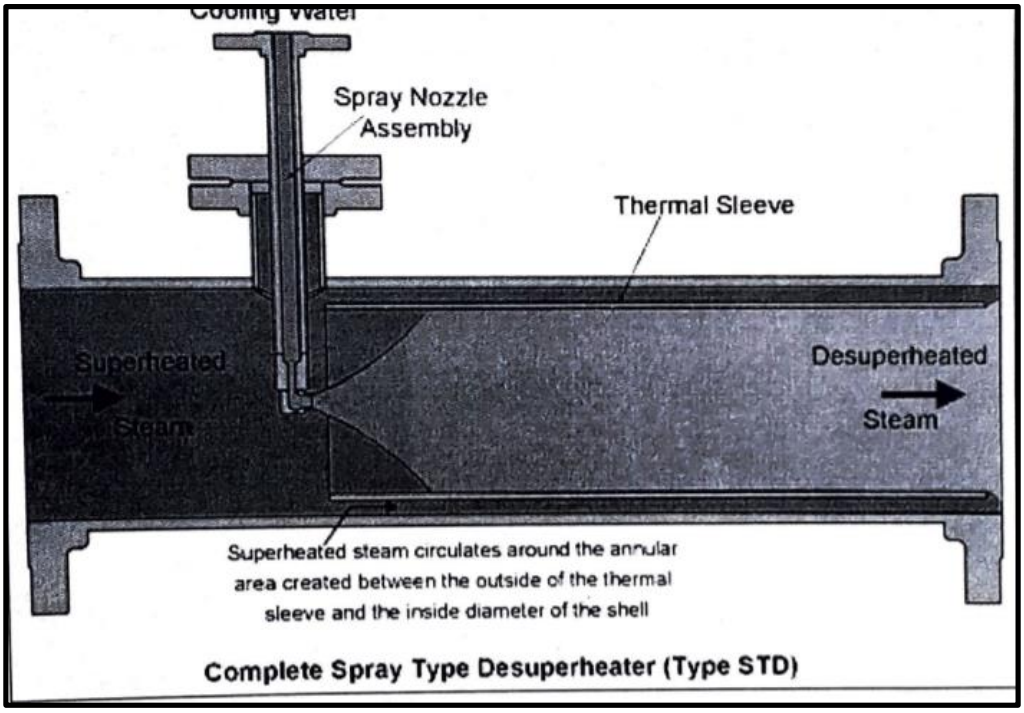

Complete Spray Type Desuperheater (Type STD)

ADVANTAGES

1. Simple in operation
2. No moving parts
3. Cost effective across the entire range of sizes
4.Minimum steam pressure drop

DISADVANTAGES

1. Desuperheated steam temperature can only be reduced to 10° C above saturation temperature
2. Longer absorption length than the steam atomizing type but less than the radial type
desuperheaters.

APPLICATIONS

Constant steam lead, constant steam temperatures, constant coolant temperature

The water used for spray must be of high purity so that no deposits are added on the superheater tubes,pipes. and turbine blades. The spray type desuperheater has been quite satisfactory in its service.steam is heated to some extent in primary superheaters cooled from that high temperature to some extent in a desuperheater by spray water and again steam is heated in the secondary superheater.
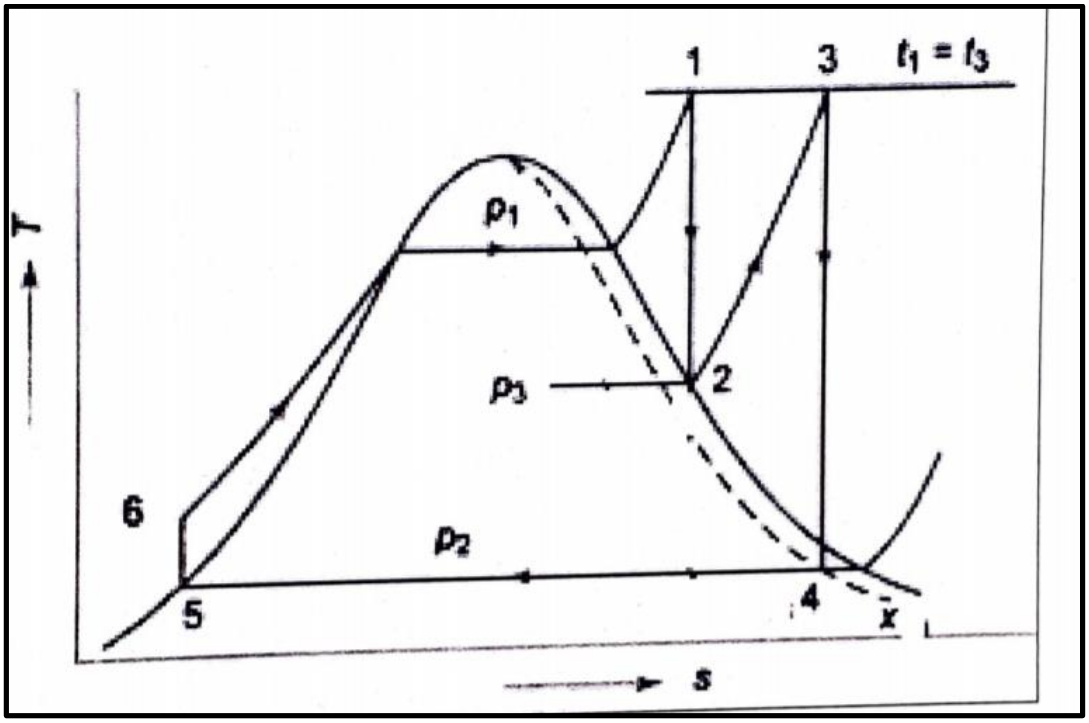
Desuperheater is placed between primary and secondary superheaters. If the desuperheater is located after the last stage superheater, the steam temperature exceeds the maximum desired temperature before desuperheating which is harmful.